Arden

25 072 4-Hole Roman Tub Filler with Hand Shower

Description

Sold Less Handles
GROHE SilkMove® Ceramic Cartridges
8 ½" Spout Reach
Relexa Ultra Hand Shower Included
Limited Lifetime Warranty
Available in StarLight® Chrome and Brushed Nickel

Flow Rate

N/A

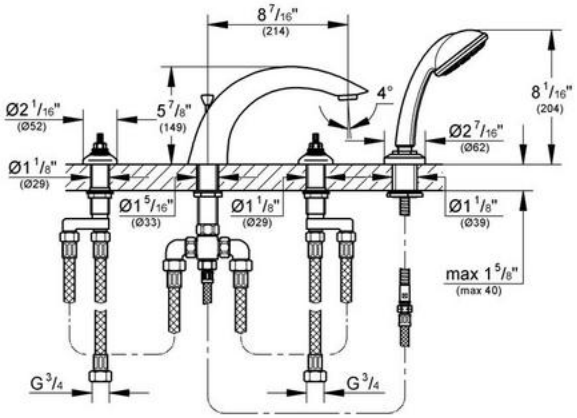

Finish Options

25 072 OOO Starlight® Chrome
25 072 ENO Infinity Brushed Nickel

GROHE America, Inc 241 Covington Drive, Bloomingdale, IL 60108 630-582-7711 Fax:630-582-7722
GROHE Canada, Inc 1226 Lakeshore Road East, Mississauga, Ontario Canada L5E 1E9 905.271.2929 Fax:905.271.9494